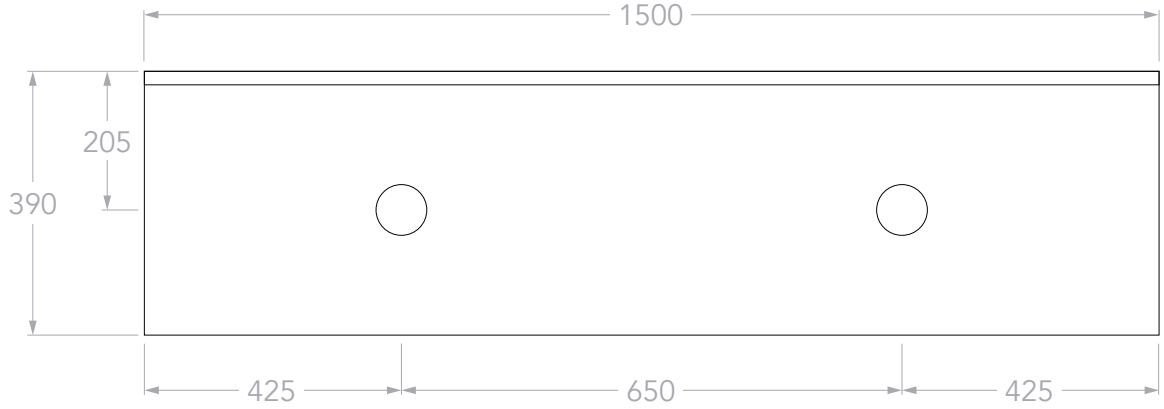

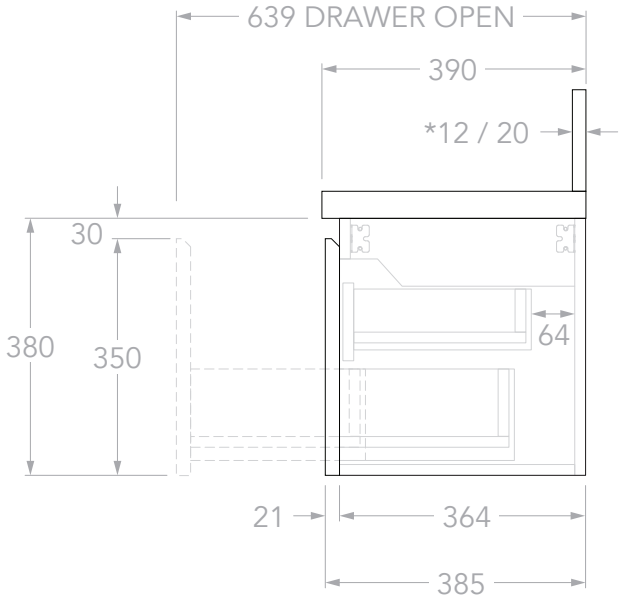

Adp

PRODUCT:	MABEL ENSUITE 1500 DOUBLE
SIZE:	1500W x 390D x 570H
CONFIGURATION:	DOOR & DRAWER, WALL HUNG
VERSION: 01	DATE: 17/09/2024

TOP:	40MM BENCHTOP
BASIN POSITION:	DOUBLE
CODE:	MABECS1500WHDCP - *(CHERRY PIE)* MABECS1500WHDDU - *(DURASEIN)* MABECS1500WHDCS - *(CAESARSTONE)*

NOTES:

DIMENSIONS ARE NOMINAL. DO NOT DRILL OR ROUGH IN UNTIL YOU HAVE RECIEVED AND MEASURED YOUR VANITY.

ALL DIMENSIONS ARE IN MILLIMETRES. DO NOT MEASURE FROM DRAWING.

*FOR DURASEIN FINISHES 12MM MATERIAL THICKNESS. 20MM THICKNESS FOR ALL OTHER BENCHTOP FINISHES.