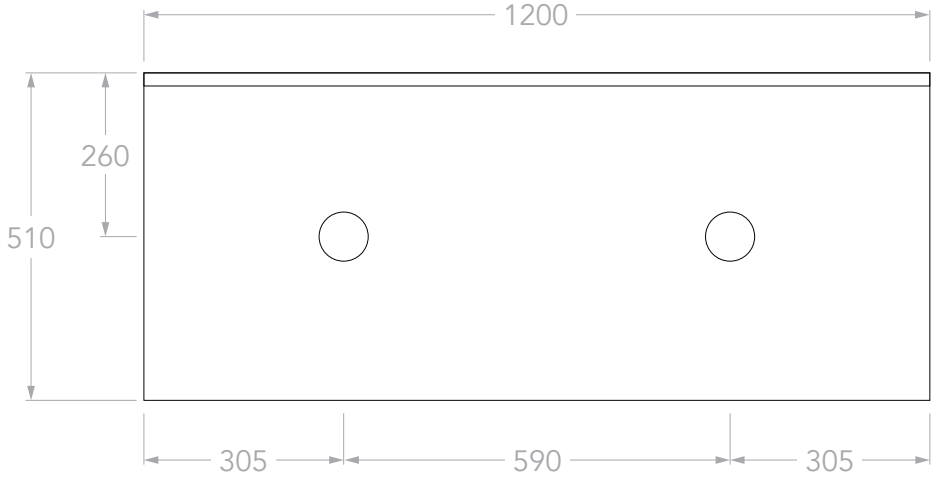

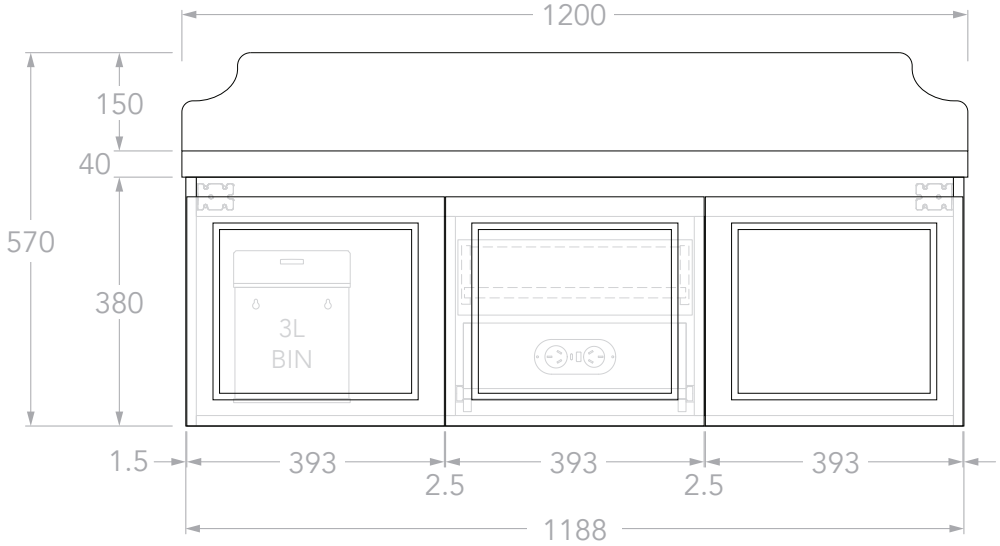

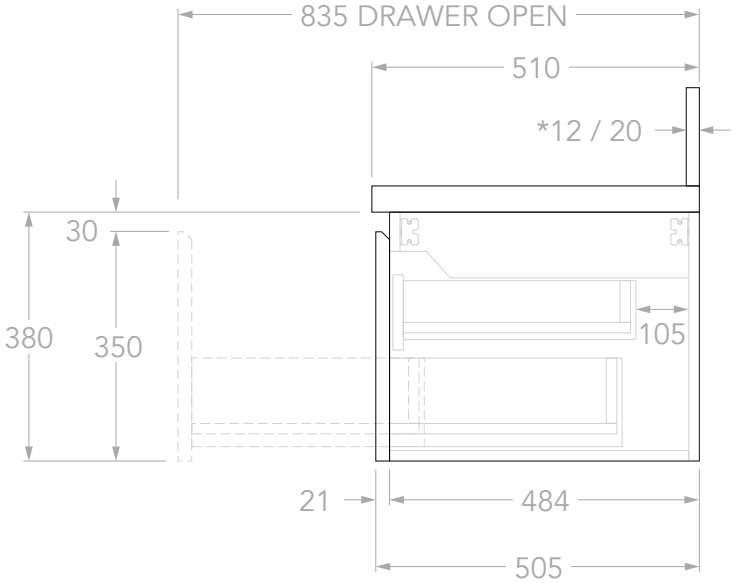

Adp

PRODUCT:	MABEL 1200 DOUBLE	TOP:	40MM BENCHTOP
SIZE:	1200W x 510D x 570H	BASIN POSITION:	DOUBLE
CONFIGURATION:	DOOR & DRAWER, WALL HUNG	CODE:	MABFCS1200WHDCP - *(CHERRY PIE)* MABFCS1200WHDDU - *(DURASEIN)* MABFCS1200WHDCS - *(CAESARSTONE)*
VERSION: 01	DATE: 09/09/2024		

NOTES:

DIMENSIONS ARE NOMINAL. DO NOT DRILL OR ROUGH IN UNTIL YOU HAVE RECIEVED AND MEASURED YOUR VANITY.

ALL DIMENSIONS ARE IN MILLIMETRES. DO NOT MEASURE FROM DRAWING.

*FOR DURASEIN FINISHES 12MM MATERIAL THICKNESS. 20MM THICKNESS FOR ALL OTHER BENCHTOP FINISHES.