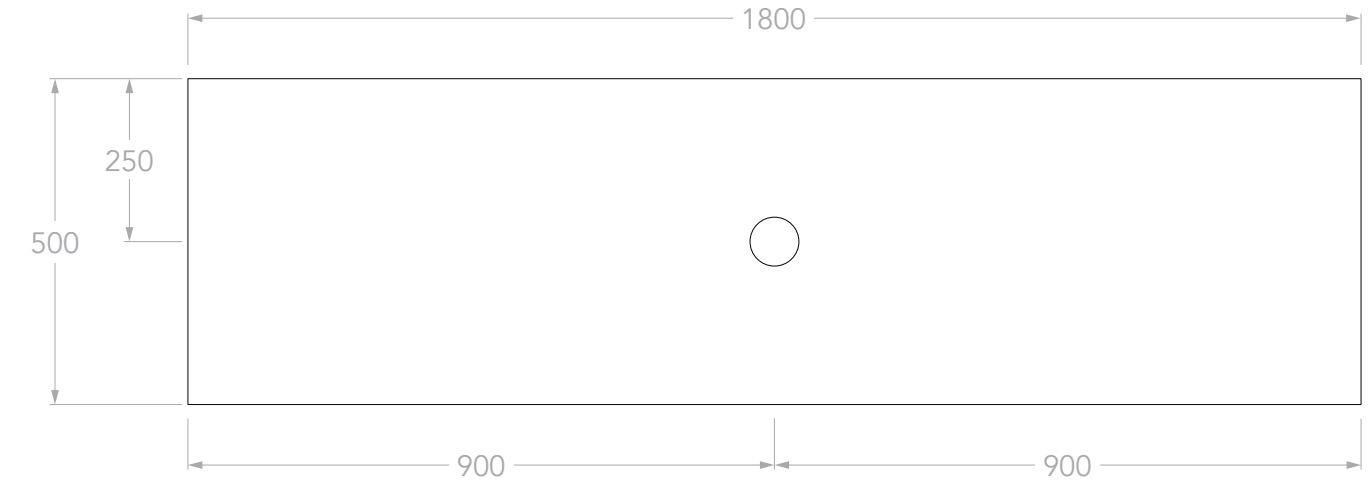

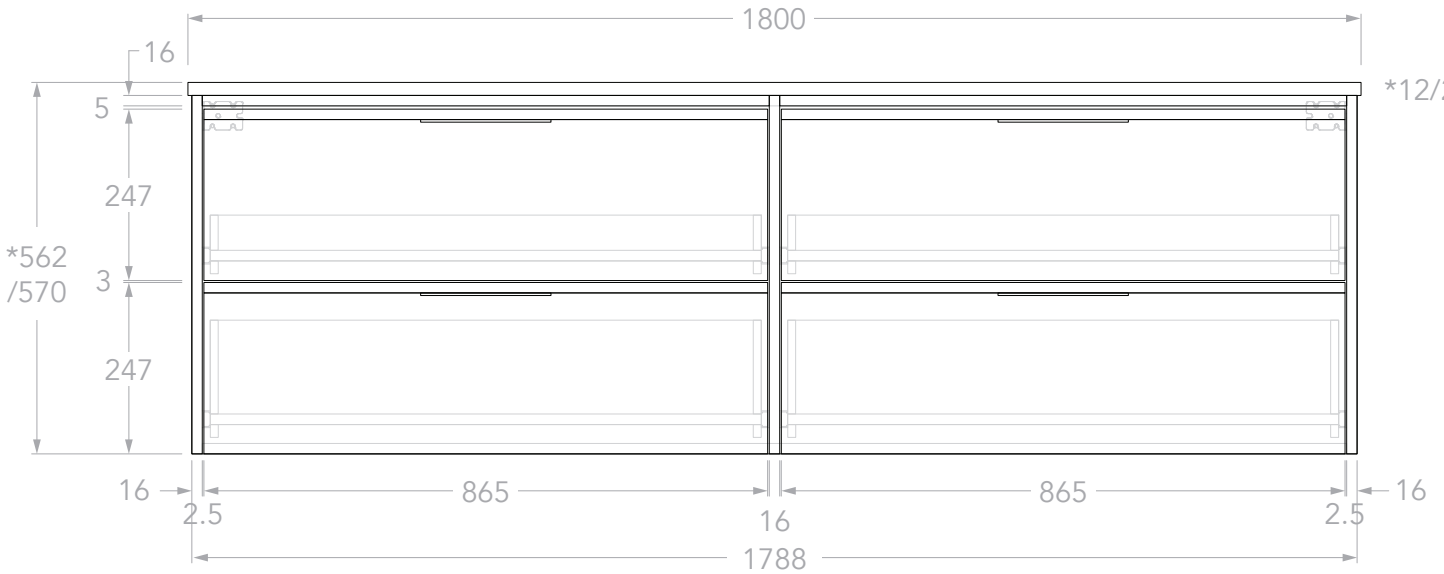

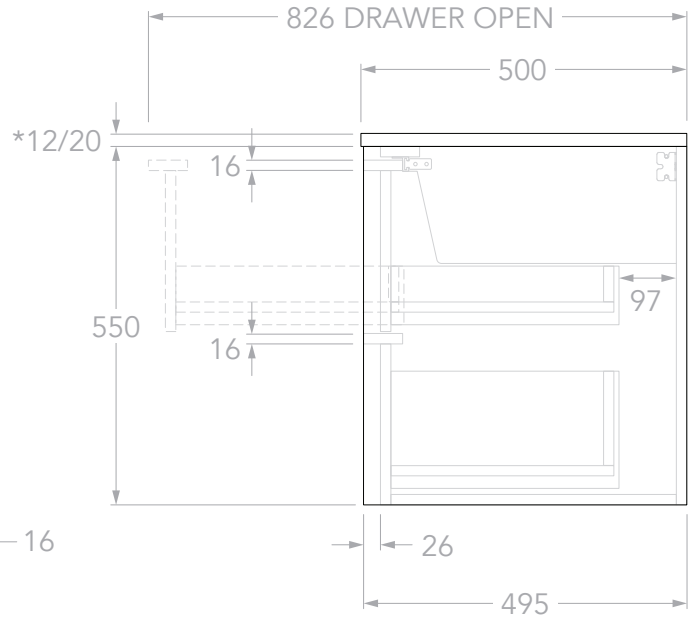

Adp

PRODUCT:	ELI 1800 CENTRE
SIZE:	1800W x 500D x *562/570H
CONFIGURATION:	ALL-DRAWER, WALL HUNG
VERSION: 01	DATE: 25/09/2024

TOP:	40MM BENCHTOP
BASIN POSITION:	CENTRE
CODE:	ELIFAW1800WHC**
	CODE SUFFIX DEPENDENT ON BENCHTOP MATERIAL
	SEE BROCHURE OR ADPAUSTRALIA.COM.AU FOR DETAILS

NOTES:

DIMENSIONS ARE NOMINAL. DO NOT DRILL OR ROUGH IN UNTIL YOU HAVE RECIEVED AND MEASURED YOUR VANITY.

ALL DIMENSIONS ARE IN MILLIMETRES. DO NOT MEASURE FROM DRAWING.

*FOR DURASEIN FINISHES 12MM MATERIAL THICKNESS. 20MM THICKNESS FOR ALL OTHER BENCHTOP FINISHES.